Bias supply DC-DC KIT_6W_12V_P7_950V

Auxiliary supply solution featuring off-line SMPS current mode controller IC with 950 V CoolMOS™ P7 SJ MOSFET

Jared Huntington (IFAT PMM ACDC AE CE)
Zechner Florian (IFAT PMM ACDC AE)

Description
KIT_6W_12V_P7_950V



Ordering code:
KIT_6W_12V_950V

Board components

- Quasi-resonant flyback PWM controller (ICE5QSAG)
- 950 V CoolMOS™ P7 SJ MOSFET (IPU95R3K7P7)

Board specifications

- Input voltage: 90 V_{DC} - 400 V_{DC}
- Output voltage: 12 V_{DC} (prim. and sec. side)
- Output power max.: 6 W (prim. + sec. side)

To be used with the following boards

- EVAL_800W_ZVS_FB_CFD7
- EVAL_2KW_ZVS_FB_CFD2
- EVAL_2KW_ZVS_FB_CFD7
- EVAL_2.5KW_CCM_4PIN
- EVAL_2K5W_CCM_4P

Copyright © Infineon Technologies AG 2017. All rights reserved.

Product features

ICE5QSAG

Description:

› Infineon latest 5th generation quasi-resonant flyback PWM controller offers high performance and comprehensive suite of protection to increase system robustness.

Summary of features:



› Novel quasi-resonant switching scheme
› Rapid and adjustable start-up with cascode configuration
› 2 level selectable active burst mode level
› Built-in digital soft-start
› Cycle by cycle peak current limitation
› Digital frequency reduction with decreasing load for higher efficiency
› Adjustable line input over-voltage and brown IN/OUT protection
› V_{CC} and CS pin short to ground protection
› OLP, output short, output over-voltage, OTP with hysteresis and V_{CC} over/under voltage protection
› Auto-restart for all protection features

Benefits:

› High efficiency with latest CoolMOS™ P7 SJ MOSFET family and quasi-resonant switching scheme
› Auto-restart recovery scheme to minimize interruption to system operation
› Extensive protection coverage to increase system robustness
› Rapid start-up performance with cascode configuration

Copyright © Infineon Technologies AG 2017. All rights reserved.

Schematic

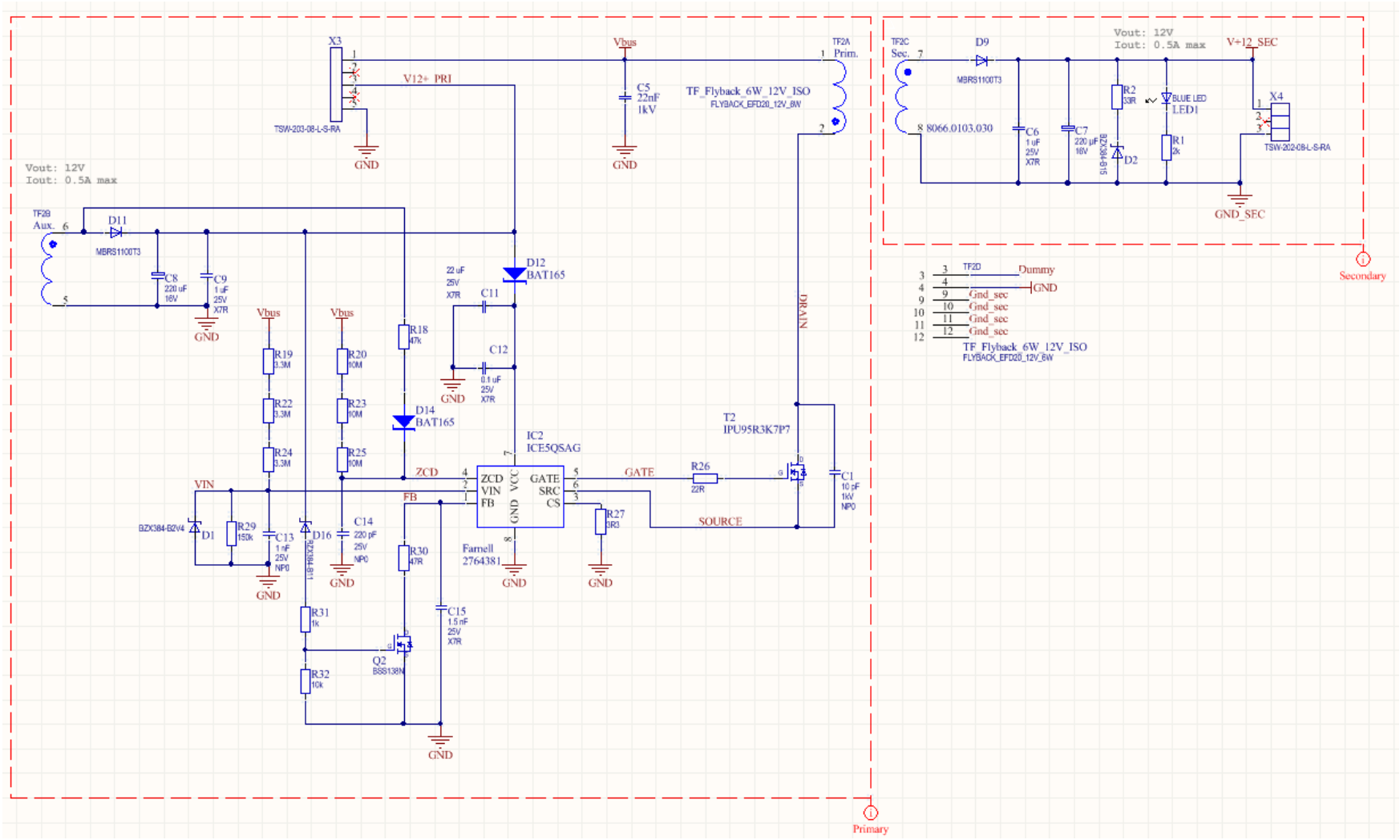

Copyright © Infineon Technologies AG 2017. All rights reserved.

Base board
KIT_6W_12V_P7_950V



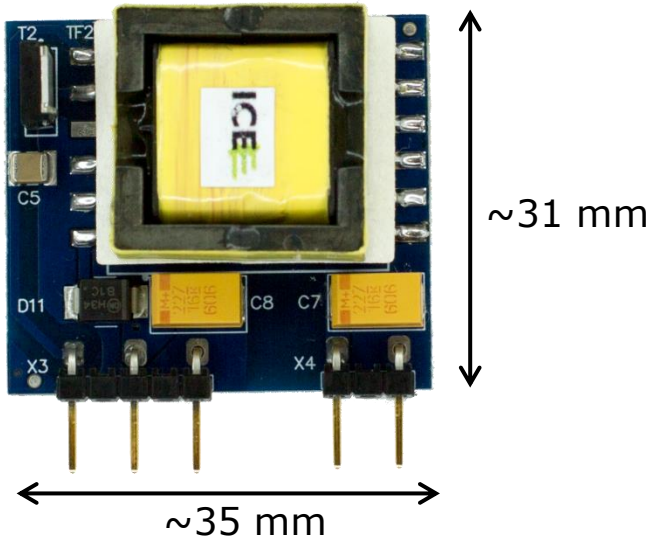

Ordering code:
KIT_6W_12V_P7_950V

Auxiliary supply solution featuring off-line SMPS current mode controller IC with an 950 V CoolMOS™ SJ MOSFET

Copyright © Infineon Technologies AG 2017. All rights reserved.

Support

Technical Material	› Application Notes › Simulation Models › Datasheets › PCB Design Data	› KIT_6W_12V_P7_950V
Evaluation Boards	› Evaluation Boards › Demoboards › Reference Designs	› www.infineon.com/evaluationboards
Videos	› Technical Videos › Product Information Videos	› www.infineon.com/mediacenter

Copyright © Infineon Technologies AG 2017. All rights reserved.

Support
Online tools and services

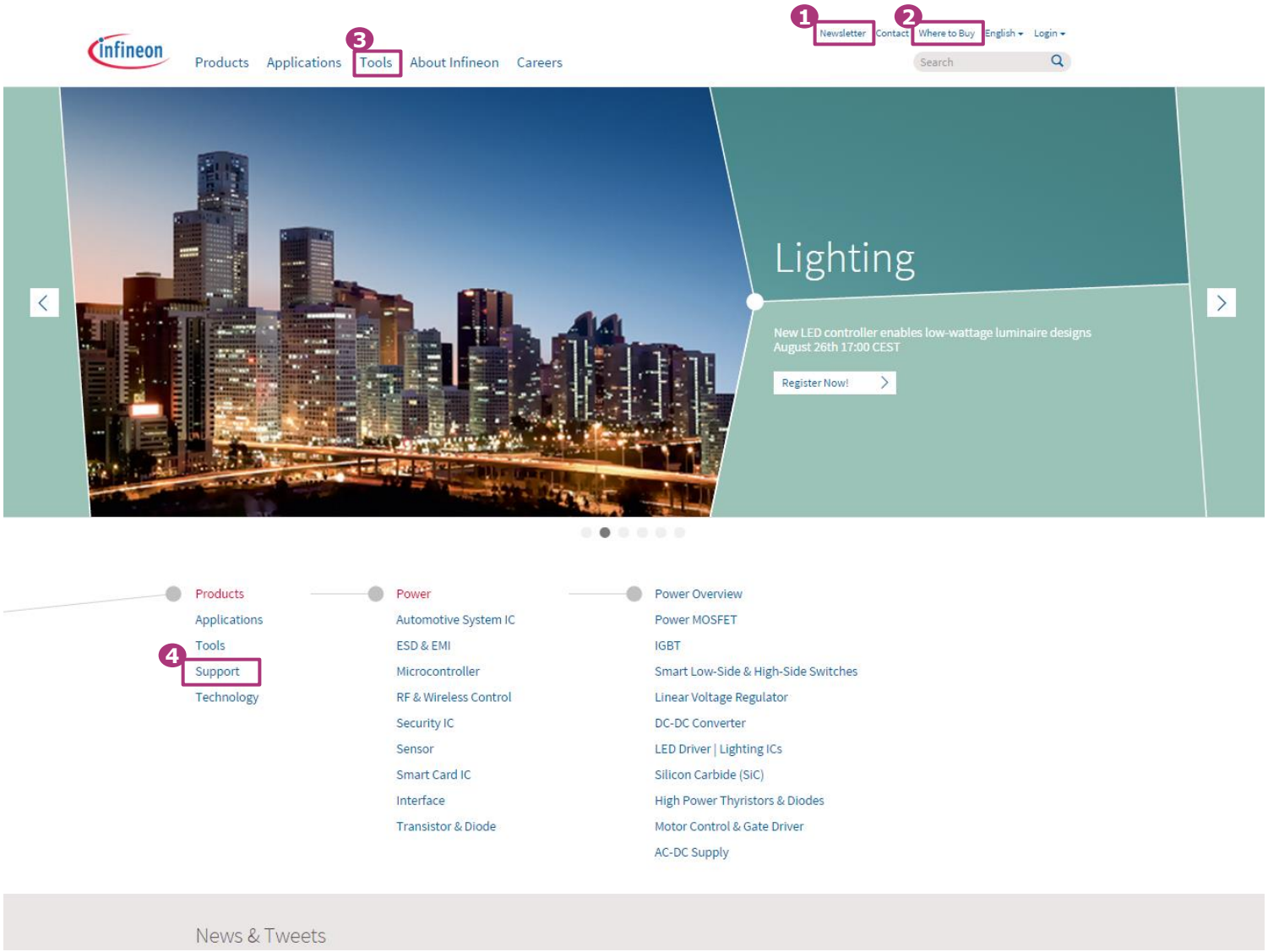

1. **Subscribe to Newsletter**
2. **Where to Buy**
3. **Tools, Finders and Selectors**
4. **Support**

Copyright © Infineon Technologies AG 2017. All rights reserved.



Part of your life. Part of tomorrow.

Infineon